We reserve all rights to this drawing, to any patents or patent registrations related hereto, and to the duplication, retransmission by third parties and misc. use. Any use of this drawing is not permitted without the written consent of STABILUS.

Intended for internal use and customer

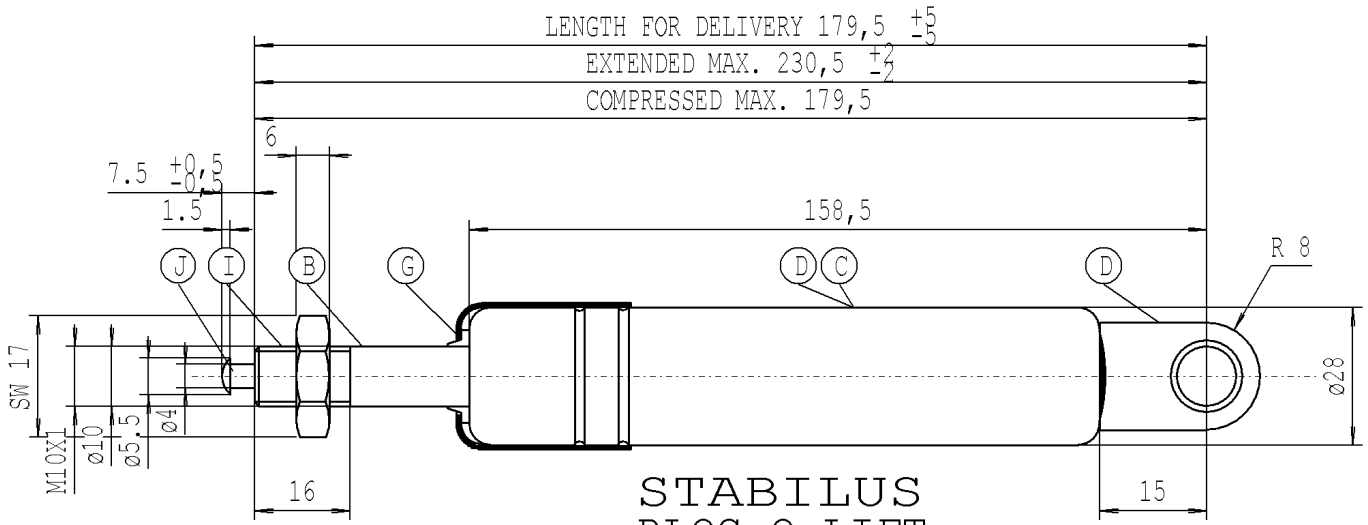

STABILUS
BLOC-O-LIFT

NICHT OEFFNEN HOHER DRUCK
DO NOT OPEN HIGH PRESSURE
STABILUS STANDARD

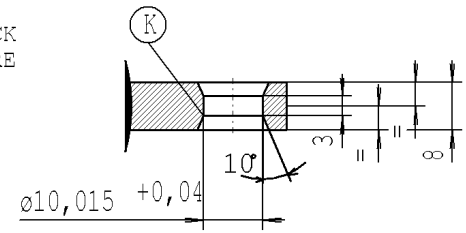

- the Gas Spring must not be mechanically modified or damaged.
- The warning label must not be removed or obscured.
- compression and extension forces measured acc. to STAB-Spec. 10009033
- Protect piston rod from dirt, paint and damage
- Disposal acc. to STAB-Spec.10009375
- Drawing not true-to-scale
- Locking force at +20° C
  in extension 2000 N
  in compression 9500 N
- Installation with piston rod upwards
- release-force of valve acc. to STAB-Spec. 10005233
- Observe installation instructions according to STAB-Spec. 10005593
- Permissible operating temperature range -30°C to +80°C
- Do not use wiper ring as mechanical end stop
- To release:
  press dia. pin by min. 2.5 mm
  Locking:
  release the pin completely
- Press release max. 6.0 mm

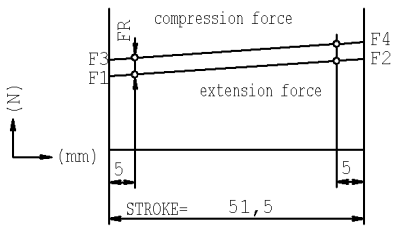

FRmax=F3-F1

X=F2/F1=1,51
Nozzle ø0.9

Forces (statically measured)

F1 (N)	F4 max (N)	FR max (N)
extension force 400±40	compression force 800	friction 80

B	Nislide black
C	print white
D	black painted
G	wiper ring
I	max. tightening torque: 25 Nm
J	bonderized
K	oiled, without paint

CHANGE		
NEW	ÜBERARBEITUNG	
OLD	- -	
CHG.NO.	626378	
NAME	9.9.15 SCHÄFER	
NO.	3	

DIMENSIONS WITHOUT TOLERANCE

+/-1

BLOC-O-LIFT

06 41 1024 20 051

Unregistered Copy
Print-out is not subject to the modification service

STABILUS

Modifications in favour of technical process reserved

DRAWING		CHECKED	
DATE	22.02.2008	NAME	MOROSANU S.

Document No. 10153060

786811

E